Box support

Box support 66 – 95 mm

Type: AS95

Product ID: 2TKA00003602

GTIN: 6438199005126

Support AS95 is used with Ideal series mounting boxes with knock-out inlets. The support is used for installation of boxes into light, non-bearing walls that are constructed on site, with interlayers of 66, 70, 80, 90 and 95 mm. It is possible to use an inlet or a strain-relief (conduitless flush mounting) with the support. Made of halogen free material (IEC/61249-2-21).

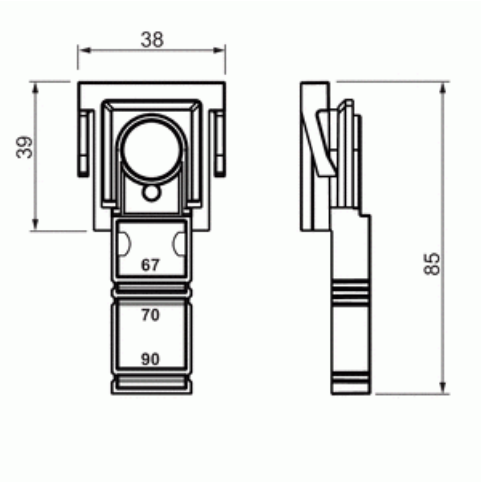

Technical specification

Packing

Package:	20/500
Unit:	PCS

ETIM Data

Type of accessory/spare part:	Other
Accessory:	Yes
Spare part:	No
Suitable for built-in installation box:	Yes
Suitable for central conduit box:	No

© ABB 2024

Business ID 0763403-0
www.installationmaterials.com

Customer service
puh. +358 10 222 1999
contact.center@fi.abb.com

ABB Exchange
+358 10 22 11

© ABB 2024

Business ID 0763403-0

www.installationmaterials.com

Customer service

puh. +358 10 222 1999

contact.center@fi.abb.com

ABB Exchange

+358 10 22 11